ASSEMBLY INSTRUCTIONS & PARTS MANUAL #2260708

COMPUTER DESK
Model No. GCT-3036

Tennsco Corp., Dickson, TN 37056-1888 • (615) 446-8000

RETAIN INSTRUCTIONS FOR FUTURE REFERENCE!

LIMITED WARRANTY

Tennsco warrants goods purchased hereunder to be free of defects in materials and workmanship for a period of one (1) year from the date of shipment, hereunder. This warranty shall not apply in the event goods are damaged as a result of misuse, abuse, neglect, accident, improper application, modification or repair by persons not authorized by Seller, where goods are damaged during shipment, or where the date stamps on the goods have been defaced, modified or removed. UNLESS CONSIDERED UNENFORCEABLE OR UNLAWFUL UNDER APPLICABLE LAW:

a. ALL IMPLIED WARRANTIES, INCLUDING BUT NOT LIMITED TO WARRANTIES OR MERCHANTABILITY AND FITNESS FOR A PARTICULAR PURPOSE ARE HEREBY EXCLUDED:
b. BUYERS REMEDY, IF ANY, FOR ANY DEFECTIVE GOODS SHALL BE LIMITED TO A REFUND BY SELLER OR REPLACEMENT OF THE GOODS AT SELLER'S OPTION, AND SHALL IN NO EVENT INCLUDE DAMAGES OF ANY KIND, WHETHER INCIDENTAL, CONSEQUENTIAL OR OTHERWISE.

NO GOODS ACCEPTED FOR RETURN WITHOUT PRIOR APPROVAL. Seller shall have the right to inspect any goods claimed to be defective at Buyers place of business or require Buyer to return the goods to Seller for inspection on Seller's premises. Transportation charges covering returned goods will be borne by Seller only if such goods are proven to be defective, are covered by this warranty and are returned within the warranty period stated above.

TENNSCO Corp., P.O. BOX 1888, DICKSON, TN 37056-1888
(615) 446-8000 or (866) 446-8686 (toll free)
Website: www.tennsco.com E-mail: Info@tennsco.com

ASSEMBLY OF COMPUTER DESK

Tools used: 4-way screw driver and a 5mm allen wrench (included with product)

1. Lay top (Ref. No. 1) face down on a piece of cardboard or other surface that will not scratch the finish.

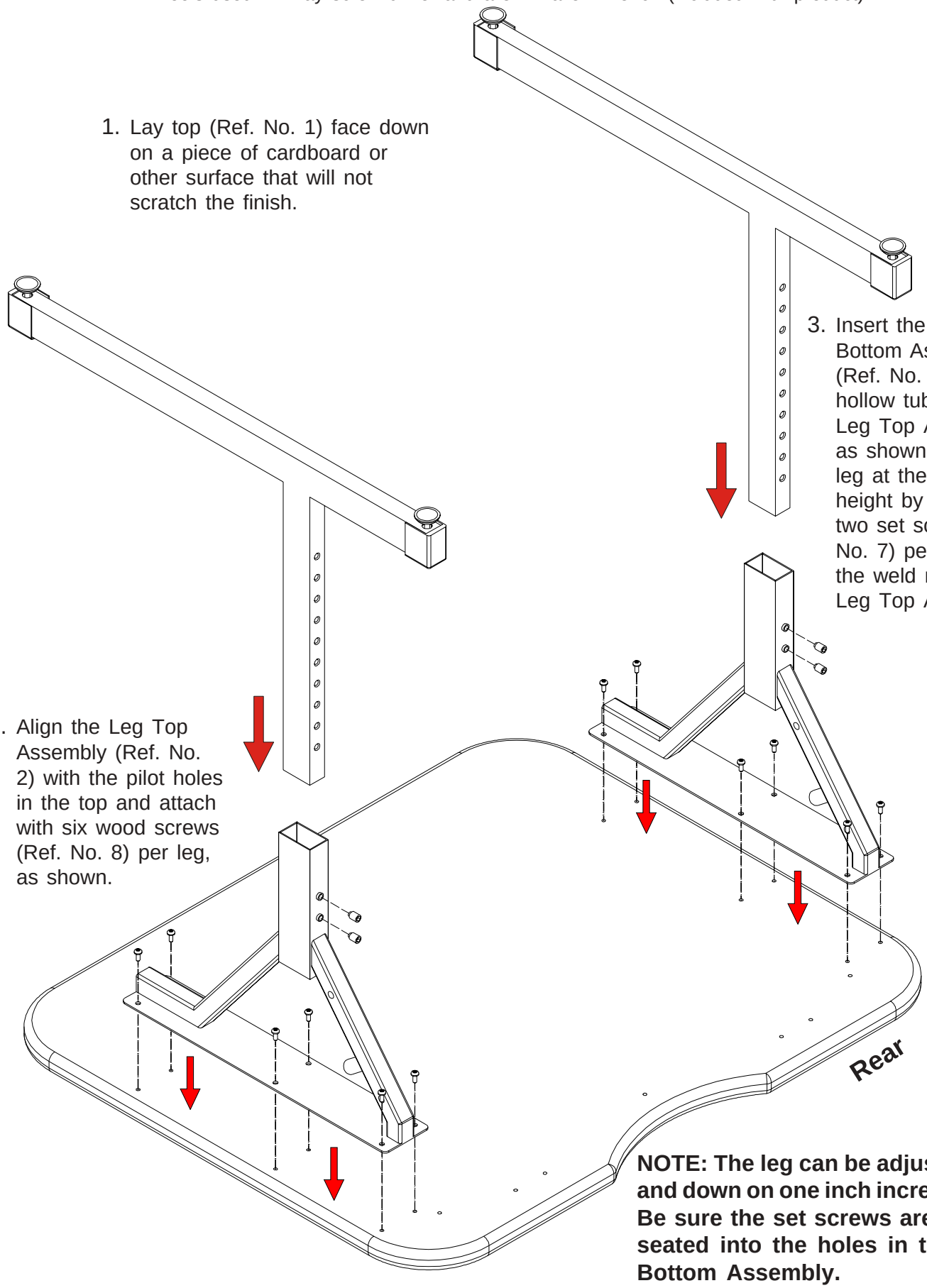

2. Align the Leg Top Assembly (Ref. No. 2) with the pilot holes in the top and attach with six wood screws (Ref. No. 8) per leg, as shown.

3. Insert the Leg Bottom Assembly (Ref. No. 3) into the hollow tube of the Leg Top Assembly as shown. Affix the leg at the desired height by inserting two set screws (Ref. No. 7) per leg into the weld nuts on the Leg Top Assembly.

NOTE: The leg can be adjusted up and down on one inch increments. Be sure the set screws are firmly seated into the holes in the Leg Bottom Assembly.

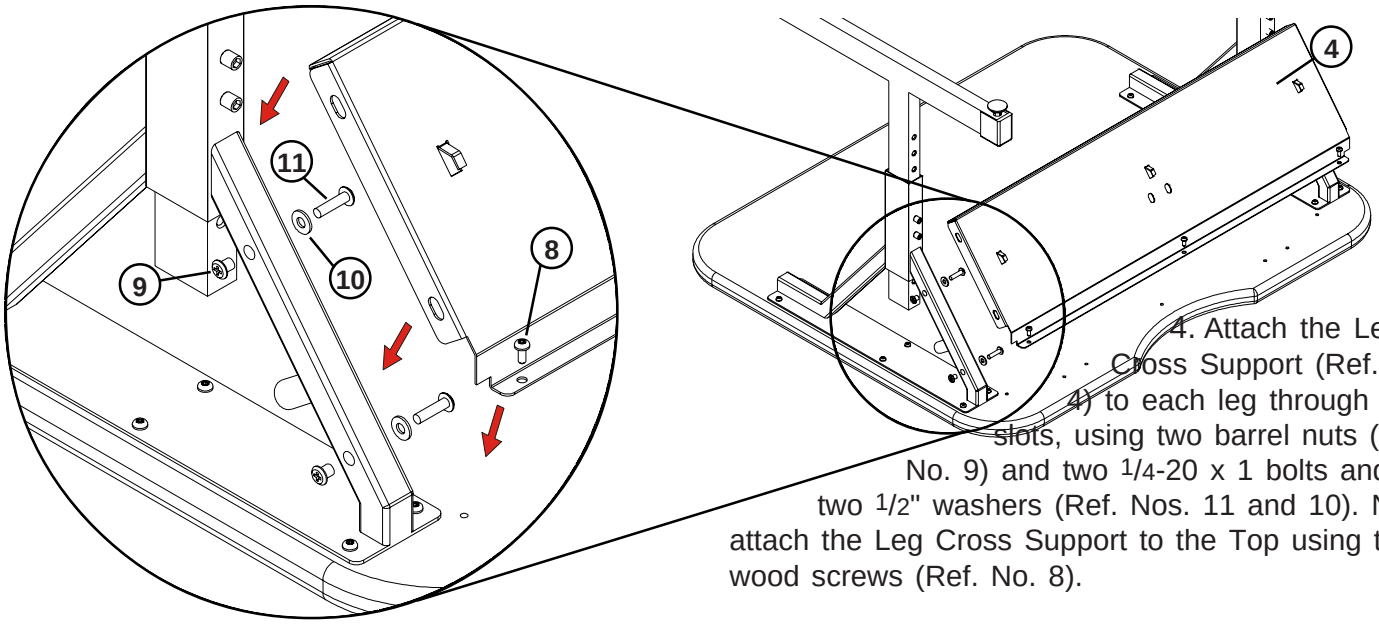

4. Attach the Leg Cross Support (Ref. No. 4) to each leg through the slots, using two barrel nuts (Ref. No. 9) and two 1/4-20 x 1 bolts and two 1/2" washers (Ref. Nos. 11 and 10). Next, attach the Leg Cross Support to the Top using three wood screws (Ref. No. 8).

5. Align the angle brackets (Ref. No. 5) with the two pilot holes in the top. (This determines their correct position on the top). Attach using two woods screws (Ref. No. 8) per bracket.

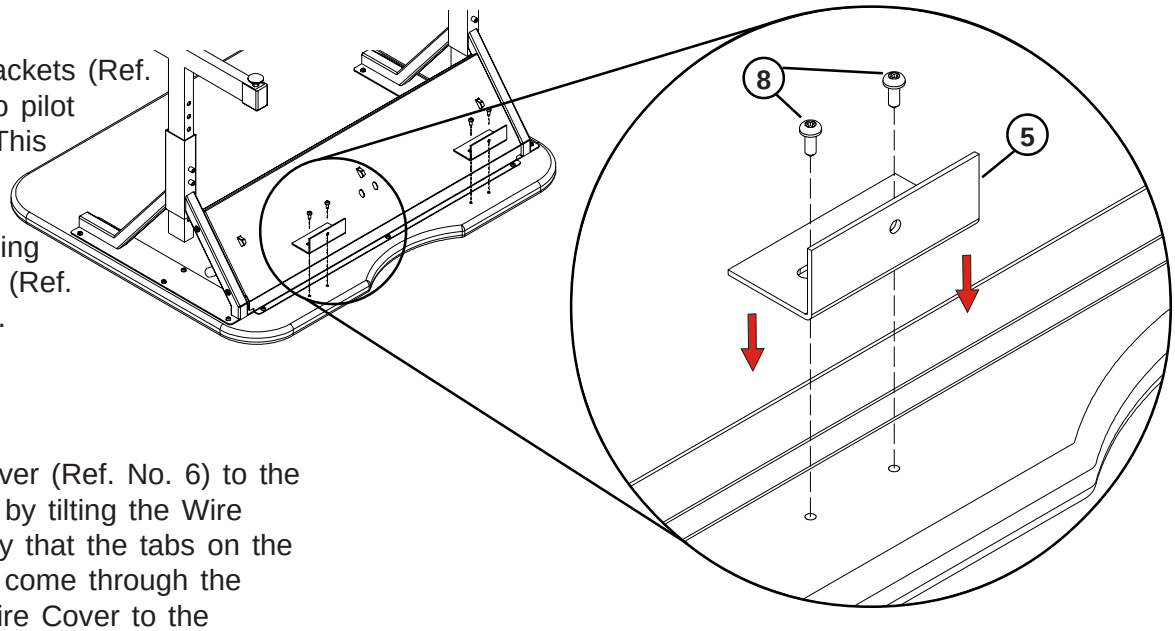

6. Attach the Wire Cover (Ref. No. 6) to the Leg Cross Support by tilting the Wire cover in such a way that the tabs on the Leg Cross Support come through the slots. Attach the Wire Cover to the Support Brackets using two 5/16 x 1/2 bolts (Ref. No. 12).

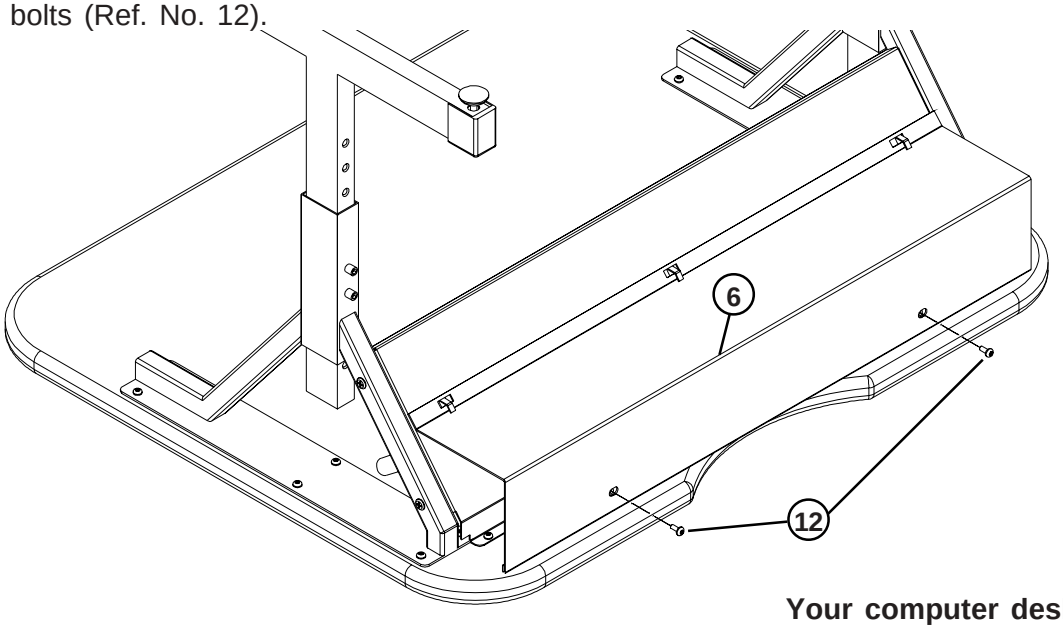

7. After making sure that all bolts and screws have been fully tightened, turn the desk to the upright position. If needed, adjust the levelers (Ref. No. 13) rests securely on the floor without rocking.

Your computer desk is now fully assembled.

REPLACEMENT PARTS

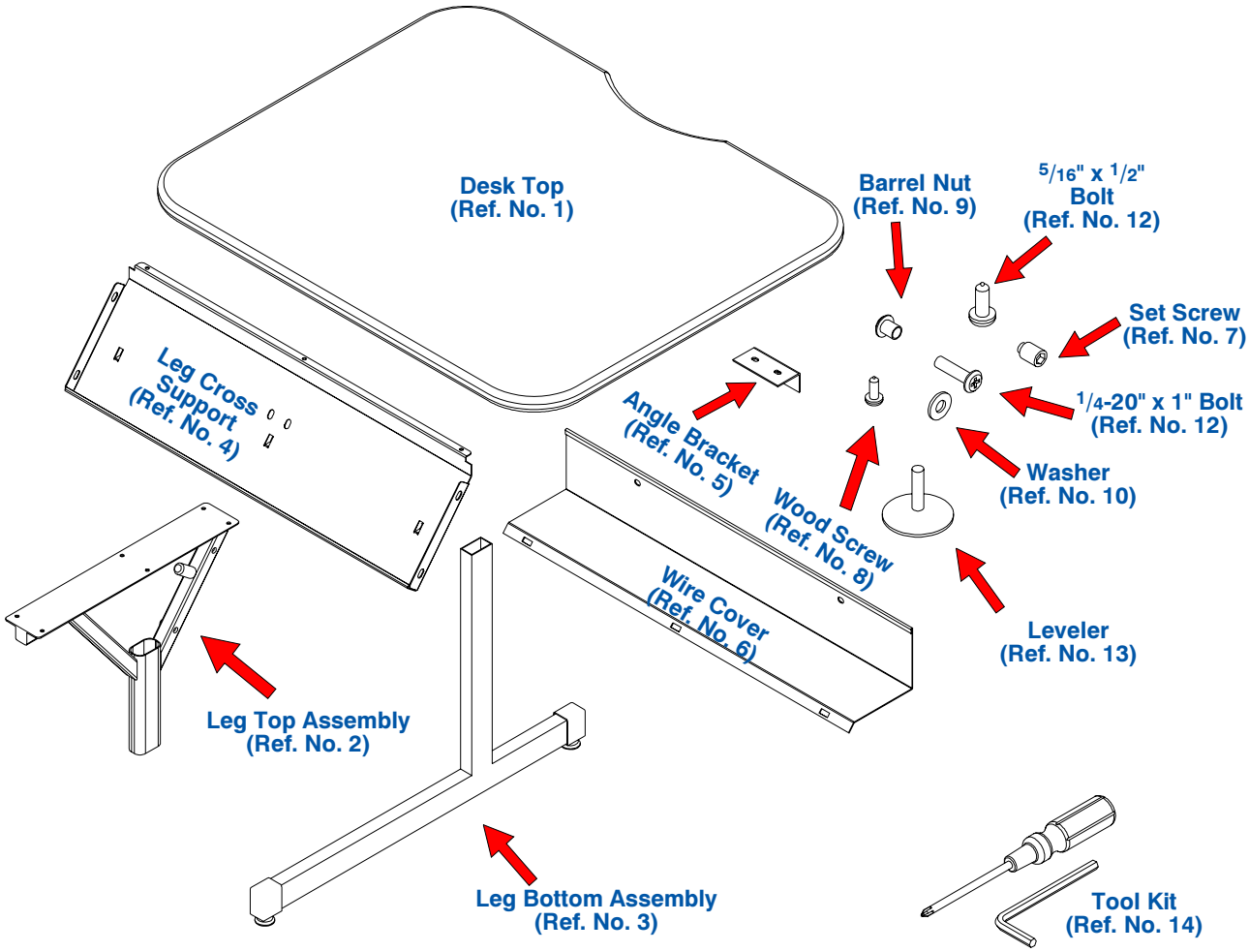

REF. NO.	DESCRIPTION	PART NO.	QUANTITY
1	Desk Top	CDTOP	1
2	Leg Top Assembly	CDLTA	2
3	Leg Bottom Assembly	CDLBA	2
4	Leg Cross Support	CDLCS	1
5	Angle Bracket	CDAB	2
6	Wire Cover	CDWC	1
7	Set Screw	CDSS	4
8	Wood Screw	CDWS	19
9	Barrel Nut	CDBN	4
10	Washer	available locally	4
11	1/4-20 x 1 Bolt	available locally	4
12	5/16 x 1/2 Bolt	available locally	2
13	Leveler	CDLVL	4
14	Tool Kit-Phillips Screwdriver & Allen Wrench	TOOLK	1

Tennsco makes every effort to ensure that all units ship complete with all parts and arrive undamaged. However, should your unit contain missing or damaged parts, replacements may be obtained directly from Tennsco. To obtain proper replacement parts, follow the instructions below: (or fill out the form at www.tennsco.com/replacement.cfm)

TO OBTAIN PROPER REPLACEMENT PARTS, PLEASE PROVIDE THE FOLLOWING INFORMATION:

- Model Number (GCT-3036)
- Description of part(s) needed and part number(s) as shown in Parts List (above)
- Was item missing, or was it damaged?
- Purchase Date
- Your company name
- Contact person's name
- Company the product was purchased from

Tennsco Corp., PO Box 1888, Dickson, TN 37056-1888 Voice: (866) 446-8686 Fax: (866) 445-7260 info@tennsco.com

If requesting parts by telephone, have as much of the above information ready as possible.