ASSEMBLY INSTRUCTIONS & PARTS MANUAL #1750608

TENNSCO WARDROBE CABINET
Model 1471

Tennsco Corp., Dickson, TN 37056-1888 • (615) 446-8000

RETAIN INSTRUCTIONS FOR FUTURE REFERENCE!

Congratulations on your purchase of a Tennsco Wardrobe Cabinet! Tennsco's 1471 units provide a level of quality you won't find elsewhere. They provide secure storage with a hanging rod for jackets, clothing, and other hanging garments, along with one shelf for hats, books, tools, and other general storage.

These cabinets also offer a locking chrome handle with two keys, and a three-point locking system for extra security.

Tennsco's cabinets are constructed from top quality 22 to 24 gauge steel, with 22 gauge steel shelves, offering weight capacities of up to 200 lbs. per shelf (evenly distributed). Our attractive and durable powder-coated paint finish will provide for years of service.

GENERAL SAFETY INFORMATION

Some parts may have sharp edges. CARE must be taken when handling various pieces to avoid injury. For safety, wear a pair of work gloves when assembling or performing any maintenance on your cabinet.

LIMITED WARRANTY

Tennsco warrants goods purchased hereunder to be free of defects in materials and workmanship for a period of one (1) year from the date of shipment, hereunder. This warranty shall not apply in the event goods are damaged as a result of misuse, abuse, neglect, accident, improper application, modification or repair by persons not authorized by Seller, where goods are damaged during shipment, or where the date stamps on the goods have been defaced, modified or removed. UNLESS CONSIDERED UNENFORCEABLE OR UNLAWFUL UNDER APPLICABLE LAW:

a. ALL IMPLIED WARRANTIES, INCLUDING BUT NOT LIMITED TO WARRANTIES OR MERCHANTABILITY AND FITNESS FOR A PARTICULAR PURPOSE ARE HEREBY EXCLUDED:
b. BUYERS REMEDY, IF ANY, FOR ANY DEFECTIVE GOODS SHALL BE LIMITED TO A REFUND BY SELLER OR REPLACEMENT OF THE GOODS AT SELLER'S OPTION, AND SHALL IN NO EVENT INCLUDE DAMAGES OF ANY KIND, WHETHER INCIDENTAL, CONSEQUENTIAL OR OTHERWISE.

NO GOODS ACCEPTED FOR RETURN WITHOUT PRIOR APPROVAL. Seller shall have the right to inspect any goods claimed to be defective at Buyers place of business or require Buyer to return the goods to Seller for inspection on Seller's premises. Transportation charges covering returned goods will be borne by Seller only if such goods are proven to be defective, are covered by this warranty and are returned within the warranty period stated above.

TENNSCO Corp., P.O. BOX 1888, DICKSON, TN 37056-1888
(615) 446-8000 or (866) 446-8686 (toll free)
Website: www.tennsco.com E-mail: Info@tennsco.com

ASSEMBLY OF 1471 CABINETS

Tools Needed: A free 11/32" nut driver is provided with each Tennsco cabinet (Ref. No. 19). In addition, you will need a flathead screwdriver. A hammer is required to install the hinge pin and lock bar. Two people recommended for assembly. Approximate assembly time: 15 to 25 minutes.

1. All reference numbers refer to the illustration on the back cover. This is to help you to identify the various parts as they are mentioned.

2. Prepare the header (Ref. No. 5) for installation by inserting a bolt into the two outside holes on each end, as shown in Inset A. The center hole should remain empty. Loosely attach nuts to each bolt, leaving enough slack so that the bolt heads may later be inserted into a slot. Prepare the sill (Ref. No. 6) in the same way.

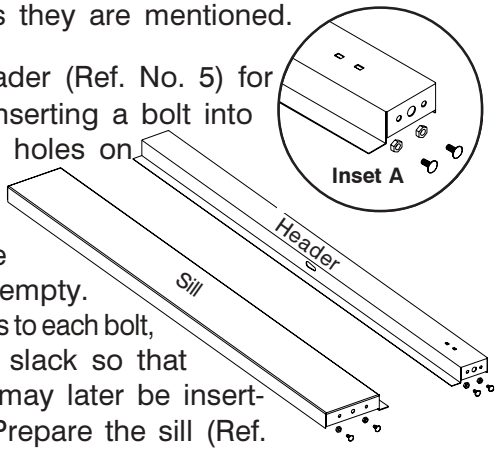

3. Place the cabinet back (Ref. No. 1) on a protected surface to prevent scratching the paint. The flange on the bottom of the back should be facing upward.

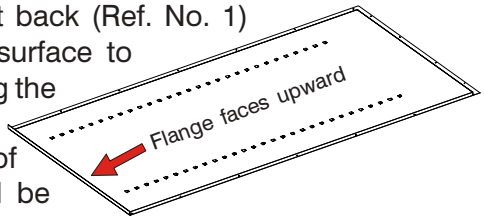

4. Attach the left side (Ref. No. 2) to the back by placing flange (A) around the back and bolting the pieces together with seven bolts and nuts (Ref. Nos. 18 &19). Be sure that the lances on all shelf adjustment strips (B) point in the same direction.

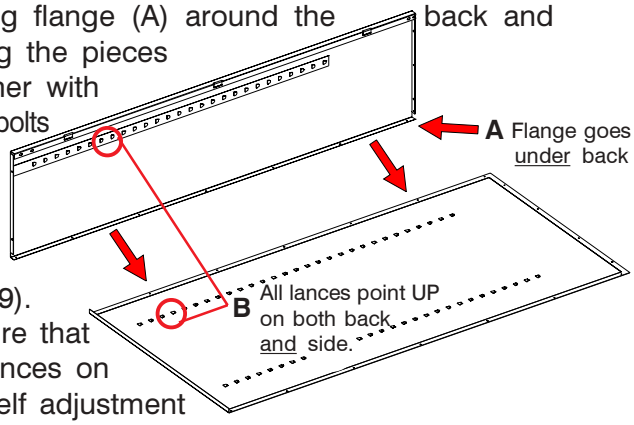

5. Attach the right side (Ref. No. 3) to the back in the same manner as you did in step 4. Make sure that the lances on the right side are pointed in the same direction as those on the back and the left side.

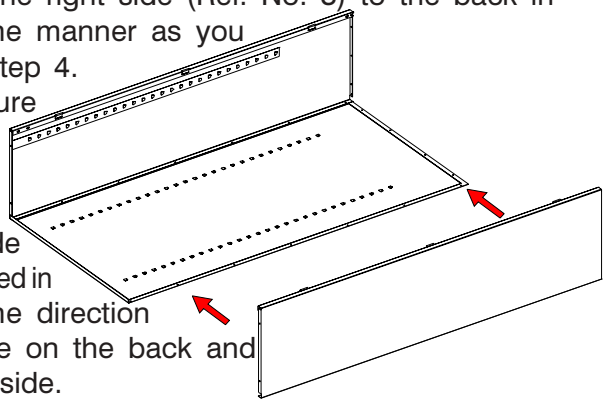

6. Locate the two keyhole-shaped slots on the front of each end-panel bottom. Attach the sill (Ref. No. 6) by inserting the loose bolt heads (which you attached to the sill in step 2) into the large end of the keyhole slots (Inset B). Position by sliding the bolts securely into the smaller end of the slots. Inset C at right shows improper and proper seating of boltheads. Tighten the four nuts securely.

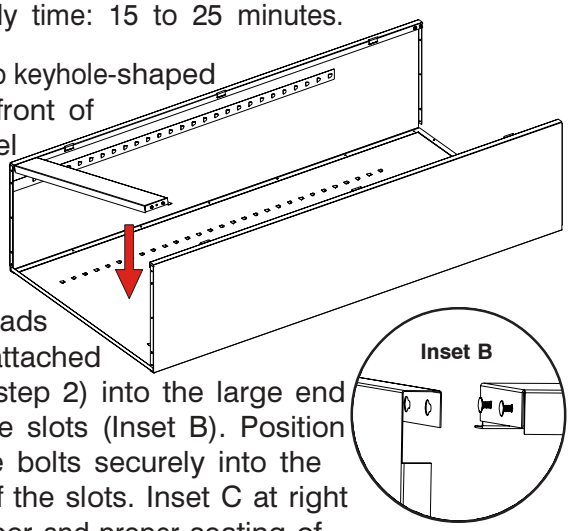

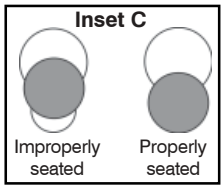

7. Insert the shelf (Ref. No. 4) into the top position on the shelf adjustment strips. Do this by inserting the shelf edges into the lances on all four strips. Be sure that the channeled edge of the shelf is toward the cabinet front. If a lance is too tight, it may be helpful to use a screwdriver to SLIGHTLY pry it open.

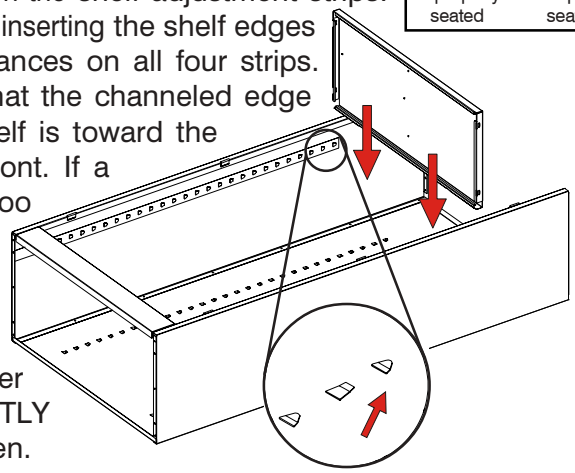

8. Locate the two keyhole-shaped slots on the top front of each end-panel. Attach the header (Ref. No. 5) in the same way you attached the sill, by inserting the previously attached loose bolt heads into the large end of the keyhole slots (Inset D). Position by sliding the bolts securely into the smaller end of the slots. Refer to Inset C (in step 6 above) for improper and proper seating of the boltheads. Tighten the four nuts securely.

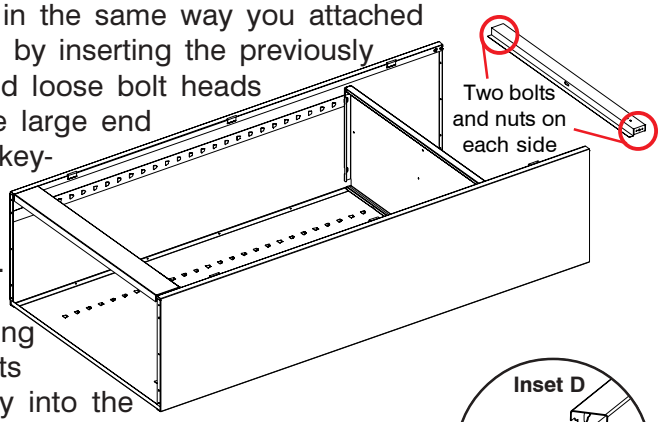

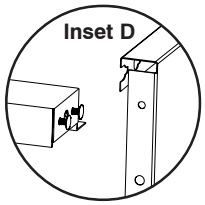

9. Place the bottom (Ref. No. 7) in the bottom shelf adjustment lances of the strips. The flange with two holes should face the front, and it should hang over the sill. Bolt to the sill with two bolts and nuts.

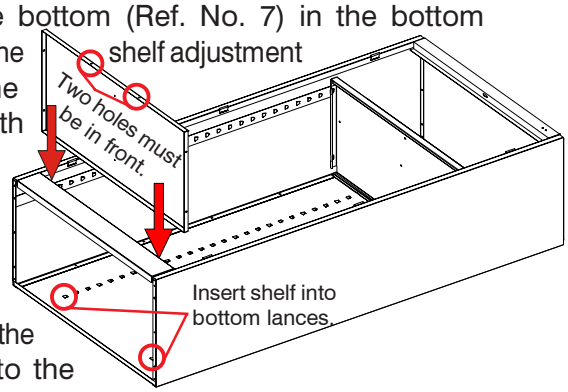

10. Turn the unit on its side. Then, attach the top (Ref. No. 8) by sliding it under the sides and header, with the flange hanging over the back. Secure with 14 bolts and nuts (three along each side, four in the back, and four along the front).

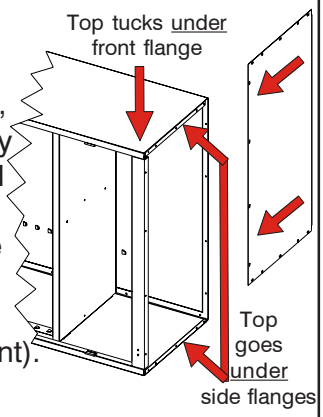

11. Set the unit upright and attach a coat rod bracket (Ref. No. 18) beneath the left side of the cabinet shelf by inserting one bolt through the hole in the left edge of the shelf. Secure with a nut. Attach the right bracket in the same way. Then, slide the coat rod (Ref. No. 17) through holes in the brackets (Inset E.)

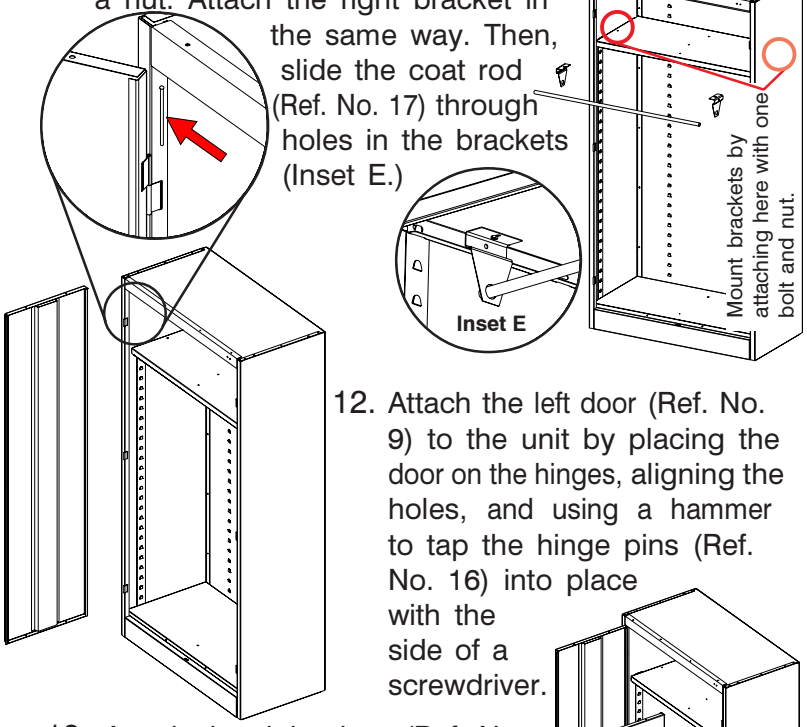

12. Attach the left door (Ref. No. 9) to the unit by placing the door on the hinges, aligning the holes, and using a hammer to tap the hinge pins (Ref. No. 16) into place with the side of a screwdriver.

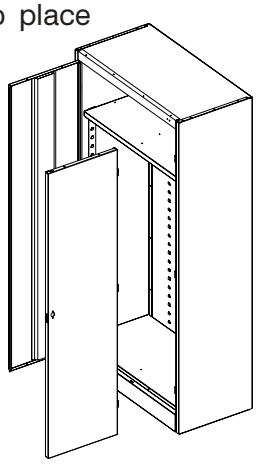

13. Attach the right door (Ref. No. 10) to the unit in the same way you attached the left door.

14. Instructions for attaching the handle and locking mechanism are given at right.

Handle/Locking System Installation Instructions

1. Place the locking handle (Ref. No. 12) on the right hand door and fasten with two slotted bolts with lockwashers.

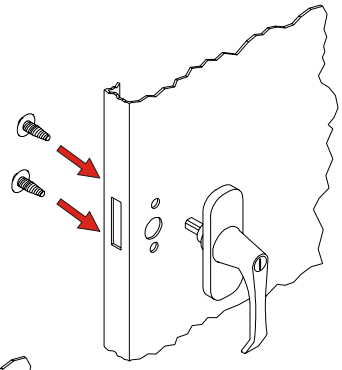

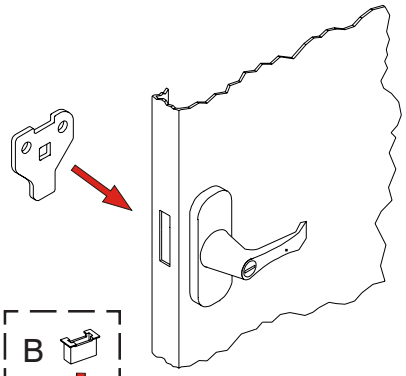

2. Turn the handle to the open position, and place the locking cam (Ref. No. 13) over the square shank of the door handle. The latch must be facing downward as shown.

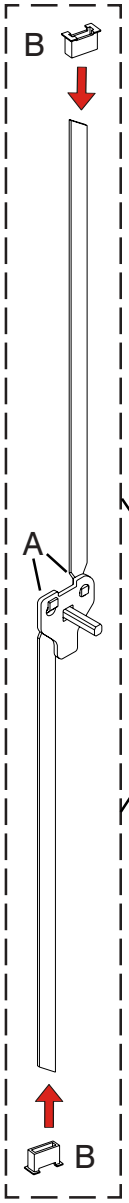

3. With the handle still in the open position, hook the locking bars (Ref. No. 11) to the locking cam (see "A" at left). Then, hold the lock bars in position while sliding the nylon lock bar guide inserts (Ref. No. 15) over the lock bar ends and through the door slots (see "B" at left).

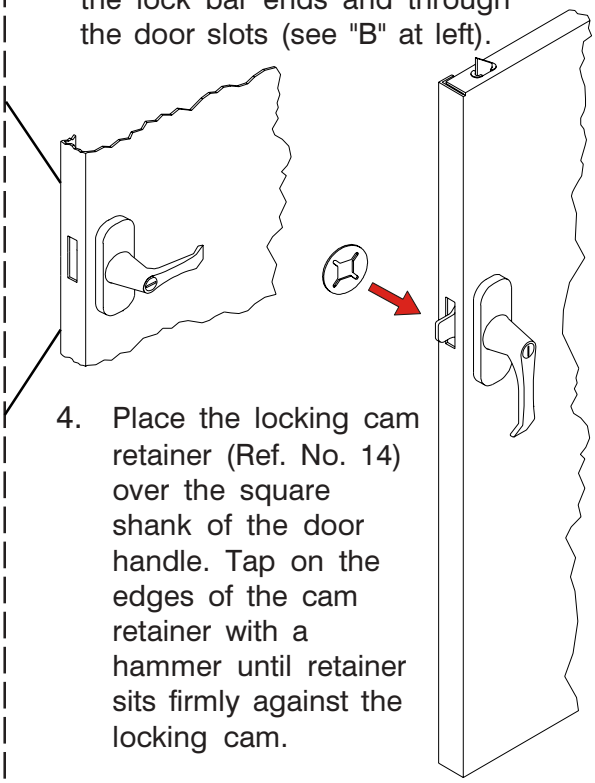

4. Place the locking cam retainer (Ref. No. 14) over the square shank of the door handle. Tap on the edges of the cam retainer with a hammer until retainer sits firmly against the locking cam.

REPLACEMENT PARTS

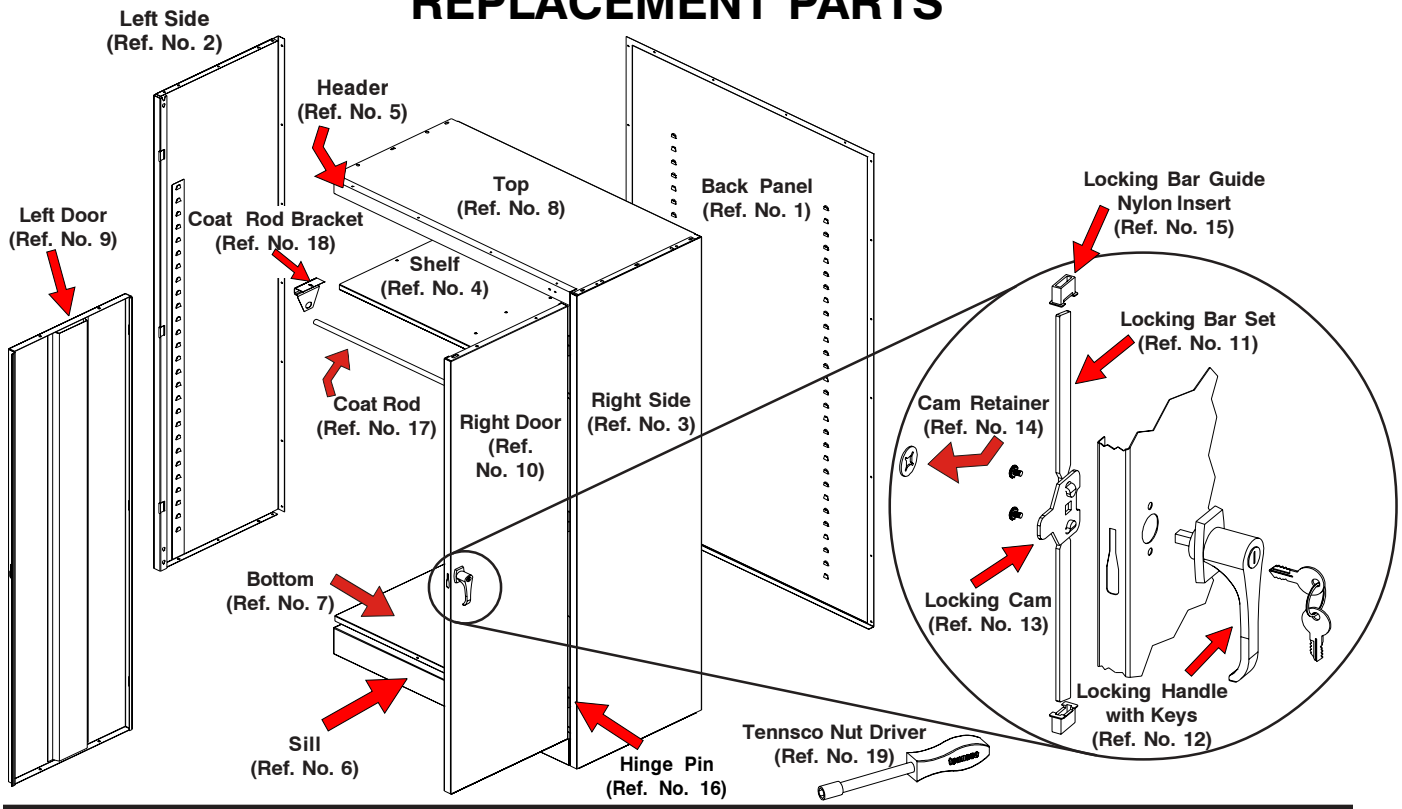

REF. NO.	DESCRIPTION	QTY.	PART NO.
1	Back panel	1	944BA
2	Left side	1	944LS
3	Right side	1	944RS
4	Shelf	1	301
5	Header	1	944HE
6	Sill	1	944SI
7	Bottom	1	944BO
8	Top	1	944TO
9	Left door	1	944LD
10	Right door	1	944RD
11	Locking bar set	1	944LB
12	Locking handle w/keys & hardware	1	944LH
13	Locking cam*	1	944LC
14	Cam retainer*	1	944CR
15	Locking bar guide insert (nylon)*	2	944GI
16	Hinge pin	6	944HP
17	Coat rod	1	045CR
18	Coat rod bracket	2	045RB
19	Tennsco nut driver	1	TOOL-2
20	#8-32 x 3/8"bolts*	50	AVAILABLE LOCALLY
21	#8-32 nuts*	50	AVAILABLE LOCALLY

*Included in Ref. No. 12, locking handle with keys and hardware (Part No. 944LH).

We make every effort to ensure that all units ship complete and arrive undamaged. However, should your unit contain missing or damaged parts, replacements may be obtained directly from us. To obtain proper replacement parts, follow the instructions below, or fill out the form at www.tennsco.com/partsorder.html.

TO OBTAIN PROPER REPLACEMENT PARTS, PLEASE PROVIDE THE FOLLOWING INFORMATION:

- Model Number (1471)
- Description of part(s) needed and part number(s) as shown in Parts List (above)
- Color (i.e. Medium Grey, etc.)
- Was item missing, or was it damaged?
- Purchase Date
- Your company name
- Contact person's name
- Who the product was purchased from

Tennsco Corp., P.O. Box 1888, Dickson, TN 37056-1888 E-mail address: info@tennsco.com
Customer Service: (866) 446-8686 Fax: (866) 445-7260

If requesting parts by telephone, ask for customer service and have as much of the above information ready as possible.